ONLINE CERTIFICATIONS DIRECTORY

Construction No. 538
TGKX.538
Roof Deck Constructions

Page Bottom

Design/System/Construction/Assembly Usage Disclaimer

- Authorities Having Jurisdiction should be consulted in all cases as to the particular requirements covering the installation and use of UL Listed or Classified products, equipment, system, devices, and materials.
- Authorities Having Jurisdiction should be consulted before construction.
- Fire resistance assemblies and products are developed by the design submitter and have been investigated by UL for compliance with applicable requirements. The published information cannot always address every construction nuance encountered in the field.
- When field issues arise, it is recommended the first contact for assistance be the technical service staff provided by the product manufacturer noted for the design. Users of fire resistance assemblies are advised to consult the general Guide Information for each product category and each group of assemblies. The Guide Information includes specifics concerning alternate materials and alternate methods of construction.
- Only products which bear UL's Mark are considered as Classified, Listed, or Recognized.

Roof Deck Constructions

See General Information for Roof Deck Constructions

Construction No. 538

February 22, 2012

Uplift — Class 90

Fire Not Investigated

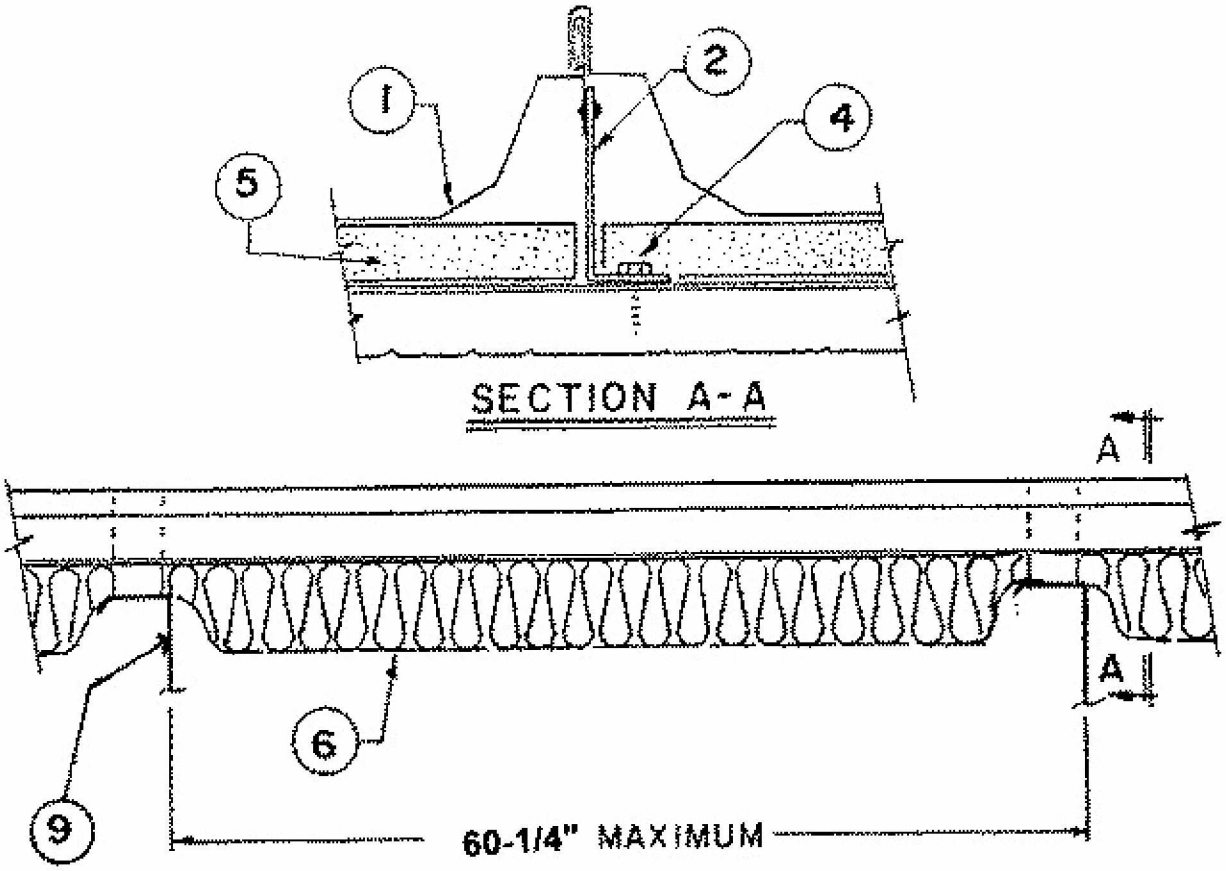

1. **Metal Roof Deck Panels* —** For Class 90-No. 24 MSG coated steel, for Class 30-No. 26 MSG min. Coated steel panels continous over two or more spans. End laps to occur adjacent to (Item 7) or on top of (Item 7A) purlins with panels overlapped 3 inch max.). Side laps to be tightened and crimped with a special motorized crimping machine. A line of sealant may be used at panel end and side laps.

A & S BUILDING SYSTEMS L P (View Classification) — "Double-Lok"

B C STEEL BUILDINGS INC (View Classification) — "BCL-MS"

CENTRAL STATES MFG INC (View Classification) — "Central-Seam Plus"

CENTRAL TEXAS METAL ROLLFORMING INC (View Classification) — "SPANLOC 300"

CHIEF INDUSTRIES INC (View Classification) — "MSC".

GOLDEN EMPIRE MFG INC, DBA GEM

BUILDINGS (View Classification) — "GEM Superior-24"

MBCI (View Classification) — "Double-Lok"

MCELROY METAL MILL INC (View Classification) — "MASTERLOK FS"

MESCO METAL BUILDINGS (View Classification) — "Double-Lok"

NCI BUILDING SYSTEMS L P (View Classification) — "Double-Lok" or "Triple-Lok"

PINNACLE STRUCTURES INC (View Classification) — "PINNACLE D-LOK"

UNITED STRUCTURES OF AMERICA INC (View Classification) — "Guardian-Lok"

WHIRLWIND STEEL BUILDINGS INC (View Classification) — "Super-Seam Plus"

ZIMMERMAN METALS INC (View Classification) — "TSS-3000"

2. **Roof Deck Fasteners*—(Panel Clips) —** Two piece floating clip with a min No. 15 MSG coated steel base and a min No. 22 MSG coated steel top. Clips spaced at 60 1/4 inches on center and over purlins.

BUILDING PRODUCTS DEVELOPMENT INC (View Classification) — "NC34501", "NC34502", "NC34701", "NC34702"

CHIEF INDUSTRIES INC (View Classification) — "MSC Sliding Clip"

GOLDEN EMPIRE MFG INC, DBA GEM

BUILDINGS (View Classification) — "GEM Low Superior Clip", "GEM High Superior Clip"

NCI BUILDING SYSTEMS L P (View Classification) — "High or Low Floating Clip" or "Double-Lok Floating Clip" or "Double-Lok Sliding Clip" or "Triple-Lok Sliding Clip" or "Double-Lok 2" Sliding Hi-Thermal Clip".

2a. **Roof Deck Fasteners*—(Panel Clips) —** Two piece floating clip with a No. 16 MSG coated steel base and a No. 20 MSG coated steel top. Clips spaced at 60 1/4 inches on center and over purlins.

MCELROY METAL MILL INC (View Classification) — "Low Floating", "High Floating" or "Utility Floating"

3. **Building Units* —** (optional)-(not shown)-Translucent reinforced plastic panels. Nominal thickness 1/16 inch, formed to the same configuration as the metal roof deck panels, with metal reinforcement cut from a classified metal roof deck panel (Item No. 1). Metal reinforcement attached to translucent reinforced plastic side segments with aluminum pop rivits. Panels continuous over two or more spans.

NCI BUILDING SYSTEMS L P (View Classification) — "Double-Lok Light Transmitting Panel"

4. **Fasteners (screws) —** Fasteners for panel clip to purlin to be 1/4- 14 by 1-1/4 inch long, self-drilling, self-tapping, 3/8 inch hex-head, plated steel screw with separate 5/8 inch O.D. neoprene washer. Two (2) screws used per clip. If no thermal spacer (Item No. 5) is used, the screws may be 1 inch long and the same type as panel clip attachment. Six (6) fasteners are to be used in the flat section of the end lap panel with the first fastener located 3-1/4 inches from either rib and then spaced in a 3-1/2, 3-1/2, 3-1/2, 3-1/2 inch pattern. An additional fastener is to be located at the second slanted segment of the rib on both sides of the end lap panel. Screws used to fasten optional skylight backing plate (Item No. 8) to be the same type as those used at the panel end laps. These screws are located at the second slanted segment adjacent to rib with three screws spaced 1-1/2 inch O.C. at the first slanted segment adjacent to rib with two screws spaced at 3 inches O.C.

5. **Thermal Spacer —** (optional)-Polystyrene, 1 inch max thickness, 3 inches wide, cut to fit between panel clips.

6. **Insulation —** (optional)-Any compressible blanket insulation, 6 inches max. thickness when located between thermal spacer (Item No. 5) and purlin (Item No. 9) before compression.

7. **End-Lap Plate Assembly —** (not shown)-Used at panel end laps; Consisting of a lower section, 5-5/8 inches wide, with a 1/8 inch vertical leg, formed to the general profile of the panel and having four 1 inch wide by 3/4 inch long tabs for sliding over the panel end. Upper section (optional) to be 1-1/2 inches wide 24 inches long and also formed to the general profile of the panel with one end formed to fit over the side rib. Five 5/16 inch diameter guide. Both parts to have ribs formed for reinforcement. Both parts to have ribs formed for reinforcement. Both parts fabricated form No. 16 MSG thick coated steel.

7A. **End-Lap Assembly (Alternate) (Not Shown) —** As an alternate to Endlap Plate Assembly (Item 7), panels (Item 1) to overlap over purlin (Item 9). Six (6) fasteners are to be used in the flat section of the end lap panel with the first fastener located 3-1/4 in. from either rib and then spaced in a 3-1/2, 3-1/2, 3-1/2, 3-1/2 in. pattern. An additional fastener is to be located at the second slanted segment of the rib on both sides of the end lap panel.

7B. **End-Lap Assembly (Alternate) (Stud Plate and Cinch Strap) (Not Shown) —** As an alternate to End-Lap Plate Assembly (Items 7 and 7A). Stud Plate (16 MSG Galv.) placed on top of purlin (Item 9) with the first stud located 1-31/32 in. from either rib and then spaced in a 4, 4-1/8, 2-3/8, 4-1/8, 4 in. pattern. Upper and Lower pre-punched metal roof deck panels (Item 1), with pre-cut tape sealer, to accommodate stud locations are positioned to receive Stud Plate. Cinch Strap (0.100 in. thick aluminum) placed over studs that penetrate both lower and upper panels. Flange nut, ¼ in. dia., hand installed on each stud. Roof Deck Fastener (Panel Clip), Item 2, installed over male leg of panel at purlin location and secured as described in Fasteners (screws) (Item 4).

8. **Light Transmitting Panel Backing Plate —** (optional)-(not shown)-When Light transmitting panel is used, backing plate is required. Minimum 18 MSG galv steel, 6 inches wide two vertical legs on both sides and formed to the configuration of the metal roof deck panel (Item No. 1). Located over purlin and offers support to the continous segment building unit (Item No. 3).

9. **Purlin —** No. 16 MSG min. gauge steel (55,000 psi min. yield strength.

*Bearing the UL Classification Mark

Last Updated on 2012-02-22

© 2012 UL LLC

The appearance of a company's name or product in this database does not in itself assure that products so identified have been manufactured under UL's Follow-Up Service. Only those products bearing the UL Mark should be considered to be Listed and covered under UL's Follow-Up Service. Always look for the Mark on the product.

UL permits the reproduction of the material contained in the Online Certification Directory subject to the following conditions: 1. The Guide Information, Designs and/or Listings (files) must be presented in their entirety and in a non-misleading manner, without any manipulation of the data (or drawings). 2. The statement "Reprinted from the Online Certifications Directory with permission from UL" must appear adjacent to the extracted material. In addition, the reprinted material must include a copyright notice in the following format: "© 2012 UL LLC".